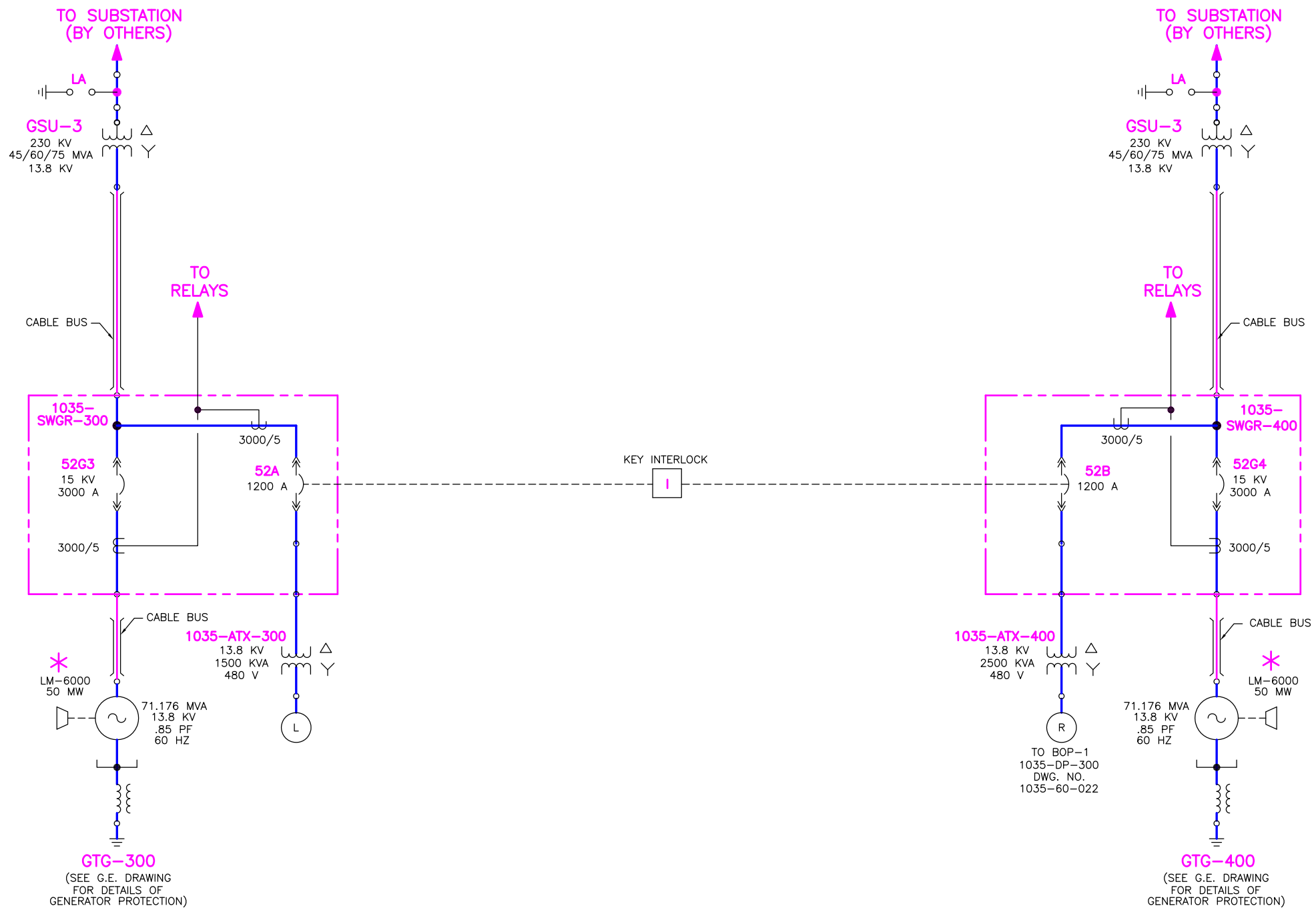

LEGEND:

- COMBINATION STARTER (BREAKER TM WITHOUT OVERLOADS) — STARTER SIZE
- COMBINATION STARTER (BREAKER WITH MOTOR OVER LOADS) MCP — STARTER SIZE
- HOA — HAND-OFF-AUTO SWITCH
- 10 — MOTOR HORSEPOWER (HP)
- R — INDICATING LIGHT COLOR
- TCP — TURBINE CONTROL PANEL
- MOTOR SPACE HEATER
- 50/51 — OVERLOAD RELAY 50 TIME 51 INST TRIP
- BREAKER DRAW OUT TYPE
- E.O — BREAKER ELECTRICALLY OPERATED
- M.O — BREAKER MANUALLY OPERATED
- D.O — BREAKER DRAW OUT

* — SUPPLIED WITH G.E. GTG PACKAGE.

REVISED	CUSTOMER INFORMATION

© COPYRIGHT, 2008, ProEnergy SERVICES ALL RIGHTS, RESERVED. THIS DRAWING IS THE PROPRIETARY AND/OR CONFIDENTIAL PROPERTY OF ProEnergy SERVICES AND IS LOANED IN STRICT CONFIDENCE WITH THE UNDERSTANDING THAT IT WILL NOT BE REPRODUCED NOR USED FOR ANY PURPOSE EXCEPT THAT FOR WHICH IT IS LOANED. IT SHALL BE IMMEDIATELY RETURNED ON DEMAND, AND IS SUBJECT TO ALL OTHER TERMS AND CONDITIONS OF ANY WRITTEN AGREEMENT OR PURCHASE ORDER WHICH INCORPORATES OR RELATES TO THIS DRAWING.

NO.	DATE	BY	APP'D	DESCRIPTION

REVISIONS

DRAWN	SL	10/08/10
CHECK		
DESIGN		
PROJ ENGR		
PROJ MGR		
QA MGR		
SCALE	NONE	SIZE D

ProEnergy EPC SERVICES

907 SOUTH DETROIT AVE.
SUITE 1140
TULSA, OKLAHOMA 74120
OFFICE
FAX
www.proenergyservices.com

ProEnergy EPC Services, LLC

ONE LINE DIAGRAM
TWO 7FA & TWO LM-6000 GTG UINITS
CURUPAO POWER PLANT

CURUPAO — VENEZUELA

JOB. NO.	DWG NO.	SH NO.	REV
T1035	1035-60-012	–	A